PROFIL TRANSVERSAL TIP 3/CROSS SECTION TYPE 3

Rigola prefabricata simpla cu capac/Simple precast gutter with standard cap
Aplicabil pe partea stanga a drumului/c.f. intre:
Applicable on the left side of the road/railway line between:
– km 492+071.07 – km 492+091.46, L=21.00m

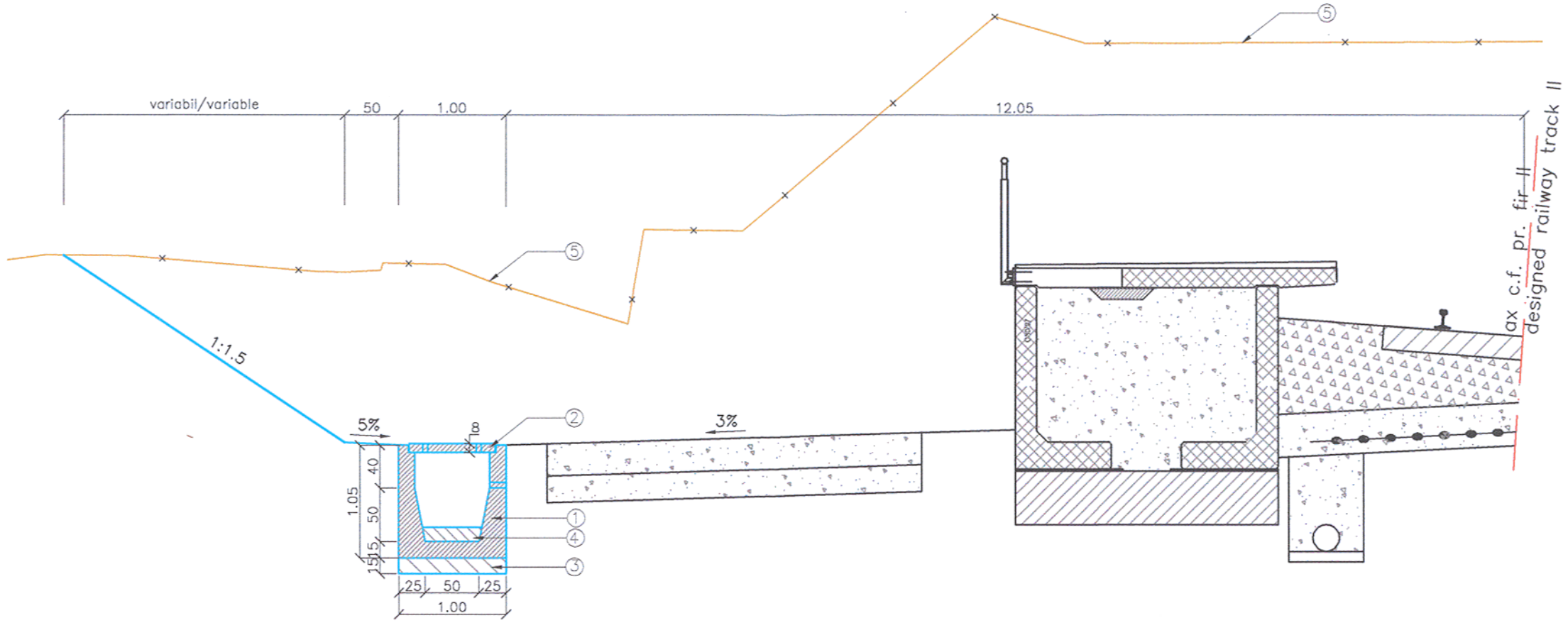

LEGENDA
1. Rigola prefabricata din beton, clasa C30/37
2. Capac din beton armat, clasa C30/37
3. Beton de fundatie, clasa C12/15
4. Beton de panta clasa C16/20
5. Linia terenului existent

LEGEND
1. Precast gutter made of concrete, class C30/37
2. Cap made of r.c., class C30/37
3. Foundation concrete, class C12/15
4. Slope concrete class C16/20
5. Existing ground level.

LEGENDA BETOANELOR/CONCRETE LEGEND

- Beton clasa C12/15, X0 / Concrete class C12/15, X0
- Beton clasa C16/20, XC1 / Concrete class C16/20, XC1
- Beton armat clasa C30/37, XF1,XC4 / Reinforced concrete class C30/37, XF1,XC4

NOTA:
1. Detalierea lucrarilor de tersasament c.f este prevazuta la obiectul "terasamente c.f.".
2. Detalierea peronului este prevazuta la obiectul "Arhitectura".

NOTE:
1. The detailed presentation of railway embankment and road works is mentioned at the object "Railway embankments".
2. The detailed presentation of railway station platform is mentioned at the object "Architecture".

Acest plan anuleaza si inlocuieste versiunea anterioara.
This plan cancels and replaces previous version.

Verificator / Expert Checker / Expert	Cerinta Requirement	Semnatura Signature	Referat / Expertiza Report / Expertise

European Investment Bank

MINISTERUL TRANSPORTURILOR

BENEFICIAR / BENEFICIARY :
CFR
COMPANIA NAȚIONALĂ DE CĂI FERATE "CFR" SA

PROIECTANT / DESIGNER: PÖYRY

			Data Date	Semnatura Signature
Aprobat Approved	Şef de echipă Team leader	C. Teodorescu	01.2013	
Verificat Checked	Expert Cheie Key Expert	L. Mărculescu	01.2013	
Subcontractant / Subcontractor		VIOTOP		
Aprobat Approved	Adjunct Şef de echipă Deputy Team leader	A.M. Baicu	01.2013	
Proiectat Designed	Inginer Engineer	L. Radu	01.2013	Radu

"Reabilitarea liniei c.f. Frontier ă - Curtici - Simeria, parte componentă a coridorului IV Pan - European pentru circula ţia trenurilor cu viteză maximă de 160 km/h"
Tronsonul 3: cap Y Gurasada - Simeria
"Rehabilitation of the Railway Line Border - Curtici - Simeria, component Part of the IV Pan - European Corridor for the Trains Circulation with maximum speed of 160 km/h"
Section 3 : end Y Gurasada - Simeria

Project 9i 35311.1

Faza / Phase: PTH+CS / TD+TS

Denumire desen / Drawing name:
INTERVAL ILIA - MINTIA
PUNCT DE OPRIRE VEȚEL / STOPPING POINT VEȚEL
Profil transversal tip 3 / Cross section type 3

Scara / Scale	Revizia / Revision	Cod desen / Drawing Code	Nr / No
1:50	1/16.05.2013	PT.03.01.23.CO.202	03/08